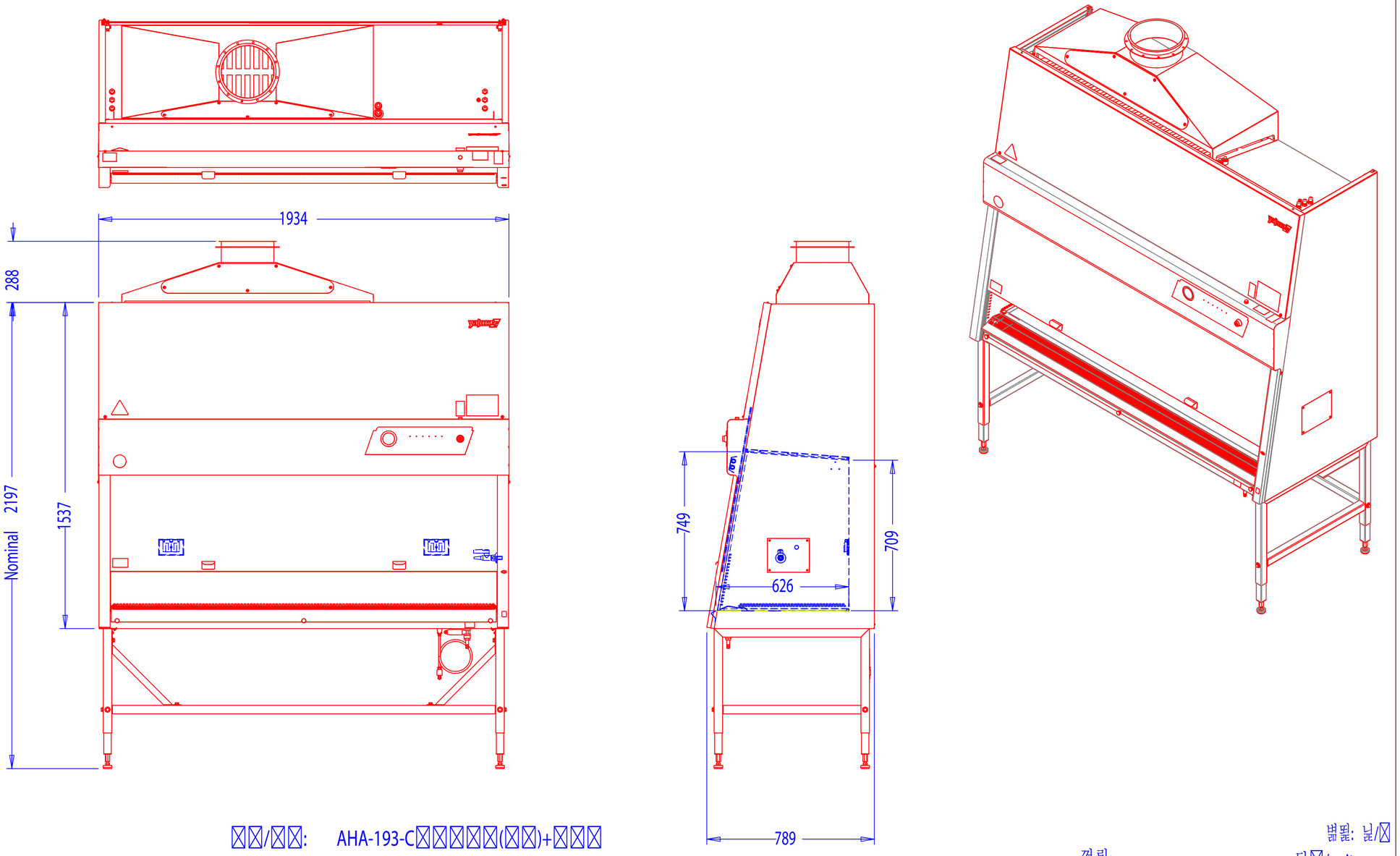

□□/□□: AHA-193-C□□□□□(□□)+□□□

벎뙬: 닒/□

껆뢰:

닿□/unit:mm

CHUNG FU
□ 뇽 곬 □

덱□□깰	덝군 Designer	□□ Date	□□ Material	귓□ Modify	귓□□듁 Modify Date	SCALE	□□ Version	□□ Processing	맏뢰/Drawing NO.	뱦껖 Audit
□□□□□□ ā 0.5 □□□□□□ ā 0.5 □□□□□□-0+0.1 □□□□□□ ā 0.3 NCT□□□□□□□ ā 0.1	□□□	2014/8/21				1:25			A00-C 2017/6/14-SHEET 1 OF 4	

AHA-193 □□□□□(□□□□□)